Turbine Flow Meter

B1500

DESCRIPTION

Blancett B1500 turbine flow meters have exceptional mechanical linearity, resulting in minimizing, or negating, temperature induced viscosity influence. Meters come with national pipe thread (NPT) or flange process fittings, sizes up to two inches and can be ordered with a Blancett B3000 flow monitor for advanced linearization and to accommodate the requirements of most applications and flow ranges.

Features	Benefits
Expanded mechanical linearity	Increased usable flow range with less sensitivity to fluid temperature/viscosity effects.
Helical rotor design	Exceptional speed-of-response, with reduced pressure drop.
High-performance ceramic ball bearings	Ceramic bearings provide near-perfect roundness, higher Rockwell hardness and are lighter and more tolerant to temperature than 440C stainless steel bearings. They eliminate adhesive wear and perform well in non-lubricating liquids found in cryogenic fluids and water.
6-bladed rotor supports	Improved flow conditioning.
Facility with NIST traceable standards	Third party audits to ensure calibration uncertainty. Laboratory correlation to verify that all calibrators produce the same result.

OPERATING PRINCIPLE

As a fluid passes through the meter, the velocity of the fluid provides rotational energy on the rotor blade assembly. The rotor blades, passing through a magnetic field (produced by the pickoff), generate pulses proportional to flow. Each pulse is transmitted to the flow monitor, where the monitor calculates the flow relative to received pulses and meter size.

APPLICATIONS

Blancett B1500 flow meters are the ideal solutions for standard clean, filtered liquid flow applications in precision industrial processes, found in the chemical/petrochemical, refining and general industries.

Shown with Blancett B3000

CALIBRATION

Meters come with a best-in-class 10-point calibration, traceable to NIST standards, using calibration solvent.

CONSTRUCTION

Blancett B1500 flow meters feature 316 stainless steel housings. Wetted materials include axial helical rotors, made of 17-4 stainless steel, that rotate on ceramic ball bearings. The supports and all other materials are made from 300 series stainless steel.

METER INSTALLATION

Blancett B1500 flow meters mount directly in the piping and can be installed in any position without affecting performance. For optimal performance, recalibrate the meter if the mounting orientation is changed from the original horizontal calibration.

To reduce flow turbulence, install a minimum of 10 diameters in length of straight piping upstream and a minimum of five pipe diameters downstream. If this cannot be accommodated due to space limitations, pay careful attention to the location of valves and bends. To compensate for piping bends, meters can be calibrated in the same piping configuration. For best performance and longevity, upstream filtration (10…75 micron, depending on meter size), is helpful to prevent bearing contamination and to avoid rotor blade damage.

TRB-DS-01799-EN-03 (May 2021)

Product Data Sheet

OPTIONAL SYSTEM CONFIGURATION

As an added benefit, B1500 flow meters that are coupled to B3000 flow monitors provide an economical, robust flow metering solution, with multiple local read and system integration options. Flow rates and totals are presented simultaneously via a crisp dot-matrix LCD display and/or transmitted to a user interface via Modbus RTU, a 4…20 mA analog output or totalizing pulse output. Basic, advanced and solar-powered configurations provide users with flexibility to meet the needs of most applications. Product configurations can be mounted in multiple ways, further expanding product flexibility to create a complete flow metering solution.

Meter Mount • Monitor is assembled to the flow meter for a complete, compact flow measurement system • NEMA 4X (IP 66) rated enclosure	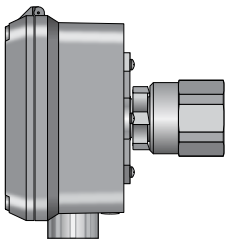	
Swivel Mount • Capable of adjustment pivot of 180 degrees for ease of viewing • NEMA 4X (IP 66) rated enclosure • Remote Swivel mount is available, consult the factory for details • Offers additional protection from elements	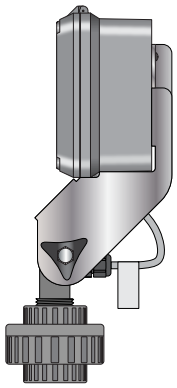	
Remote Mount • Ideal when then monitor needs to be remotely mounted • Suitable for high temperature, excessive noise or inaccessible areas • NEMA 4X (IP 66) rated enclosure • Panel, DIN rail and pipe mounting hardware are included • Cable lengths from 10…100 ft (3…30.5 m) are sold separately	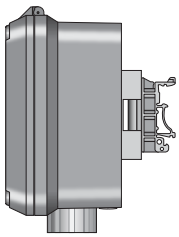	

For more information on the Blancett B3000 flow monitor, visit *www.badgermeter.com*.

METER MODEL NUMBER

Model		
Blancett B1500 Turbine Flow Meter	B150	
Meter Size		
1/4 in. (6.3 mm) Bore | 1/2 in. (12.7 mm) End Fitting		501
3/8 in. (9.5 mm) Bore | 1/2 in. (12.7 mm) End Fitting		502
1/2 in. (12.7 mm) Bore | 1/2 in. (12.7 mm) End Fitting		503
5/8 in. (15.9 mm) End Fitting		625
3/4 in. (19.0 mm) End Fiting		750
1 in. (25.4 mm) End Fitting		110
1-1/4 in. (31.7 mm) End Fitting		125
1-1/2 in. (38.1 mm) End Fitting		115
2 in. (50.8 mm) End Fitting		120
End Fitting		
National Pipe Thread		NPT
150# ANSI Rasied Face Flange		F15

SPECIFICATIONS

Performance	**Accuracy**	± 0.5% of reading with single K-factor; 0.25% with B3000 linearization
	Repeatability	± 0.02% of reading
	Response Time	2…3 ms (at 1.2 cSt)
Materials of Construction	**Body**	316 stainless steel
	Shafts	316 stainless steel
	Rotors	17-4 PH stainless steel
	Bearing	Ceramic

Flow Ranges

Part Number	Flow Range	ΔP at 10:1 *	K-Factor**
B150-501-XXX	0.25…2.50 gpm (0.9…9.46 lpm)	3.5 PSID (0.25 kg/cm^2)	28,800 pulses/US gal (7910 pulses/L)
B150-502-XXX	0.5…5.0 gpm (1.9…18.93 lpm)	4.5 PSID (0.32 kg/cm^2)	14,400 pulses/US gal (3805 pulses/L)
B150-503-XXX	0.75…7.50 gpm (2.8…28.39 lpm)	6.0 PSID (0.42 kg/cm^2)	9600 pulses/US gal (2536 pulses/L)
B150-625-XXX	1.25…12.50 gpm (4.7…47.32 lpm)	5.0 PSID (0.35 kg/cm^2)	5760 pulses/US gal (1522pulses/L)
B150-750-XXX	2.5…25.0 gpm (9.5…94.63 lpm)	5.0 PSID (0.35 kg/cm^2)	2800 pulses/US gal (761 pulses/L)
B150-110-XXX	5.0…50.0 gpm (18.9…189.27 lpm)	5.0 PSID (0.35 kg/cm^2)	1440 pulses/US gal (380 pulses/L
B150-125-XXX	7.5…75.0 gpm (28.3…283.91 lpm)	5.5 PSID (0.39 kg/cm^2)	960 pulses/US gal (254 pulses/L)
B150-115-XXX	12.5…125.0 gpm (47.3…473.18 lpm)	6.0 PSID (0.42 kg/cm^2)	576 pulses/US gal (152 pulses/L)
B150-120-XXX	25…250.0 gpm (94.6…946.35 lpm)	6.5 PSID (0.46 kg/cm^2)	288 pulses/US gal (76 pulses/L)

*Pressure drop is based on using MIL-PRF-17024E, Type II at 77° F (25° C), with a specific gravity of 0.77
**Actual K-factor varies from meter to meter and is listed on the calibration report

Pressure Ratings

NPT End Fittings

Part Number	Nominal Pipe Size	Male	
		psig	bar
B150-501-NPT	0.25 in. (6.35 mm)	5922	408
B150-502-NPT	0.37 in. (9.52 mm)	4700	324
B150-503-NPT	0.50 in. (12.70 mm)	4418	305
B150-625-NPT	0.75 in. (19.05 mm)	4136	285
B150-750-NPT	0.75 in. (19.05 mm)	4136	285
B150-110-NPT	1.00 in. (25.40 mm)	4042	278
B150-125-NPT	1.25 in. (31.75 mm)	4700	324
B150-115-NPT	1.50 in. (38.10 mm)	4230	291
B150-120-NPT	2.00 in. (50.80 mm)	3666	253

NOTES:
1. Pressure ratings listed are for temperatures up to 100° F (37.8° C).
2. Pressure rating is calculated with an allowable stress value of 20,000 psi (1378 bar) for 316 SS per pressure piping code ASME B31.3.
3. Chart is displaying safe working pressure, in accordance with power piping code ASME B31.1.

ANSI Flange	PSIG	Bar
150#	275	19

NOTES:
1. Specifications from maximum non-shock allowable working pressure in psig at 100° F (37.8° C) or less.
2. Stainless steel 316A-181 material.

DIMENSIONS

NPT End Fitting

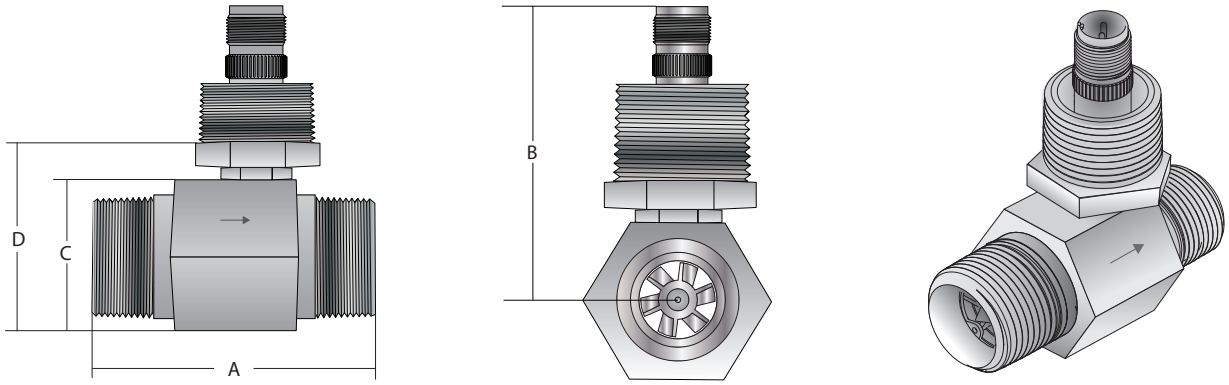

Part Number	End Fitting	A	B	C	D
B150-501-NPT	0.50 in. (12.70 mm)	2.45 in. (62.23 mm)	2.70 in. (68.58 mm)	1.12 in. (28.45 mm) Square Body	1.62 in. (40.89 mm)
B150-502-NPT	0.50 in. (12.70 mm)	2.45 in. (62.23 mm)	2.70 in. (68.58 mm)	1.12 in. (28.45 mm) Square Body	1.62 in. (40.89 mm)
B150-503-NPT	0.50 in. (12.70 mm)	2.45 in. (62.23 mm)	2.80 in. (71.12 mm)	1.12 in. (28.45 mm) Square Body	1.62 in. (40.89 mm)
B150-625-NPT	0.625 in. (15.88 mm)	2.72 in. (69.08 mm)	2.80 in. (71.12 mm)	1.25 in. (31.75 mm) Square Body	1.75 in. (44.45 mm)
B150-750-NPT	0.75 in. (19.05 mm)	3.25 in. (82.55 mm)	2.90 in. (73.66 mm)	1.25 in. (31.75 mm) Square Body	1.75 in. (44.45 mm)
B150-110-NPT	1.00 in. (25.40 mm)	3.56 in. (90.42 mm)	3.00 in. (76.20 mm)	1.63 in. (41.40 mm) Hex Body	2.13 in. (54.10 mm)
B150-125-NPT	1.25 in. (31.75 mm)	4.06 in. (103.1 mm)	3.10 in. (78.74 mm)	1.88 in. (47.75 mm) Hex Body	2.38 in. (60.45 mm)
B150-115-NPT	1.50 in. (38.10 mm)	4.59 in. (116.6 mm)	3.30 in. (83.82 mm)	2.25 in. (57.15 mm) Hex Body	2.75 in. (69.85 mm)
B150-120-NPT	2.00 in. (50.80 mm)	6.06 in. (153.9 mm)	3.50 in. (88.90 mm)	2.75 in. (69.85 mm) Hex Body	2.75 in. (69.85 mm)

Flange End Fitting

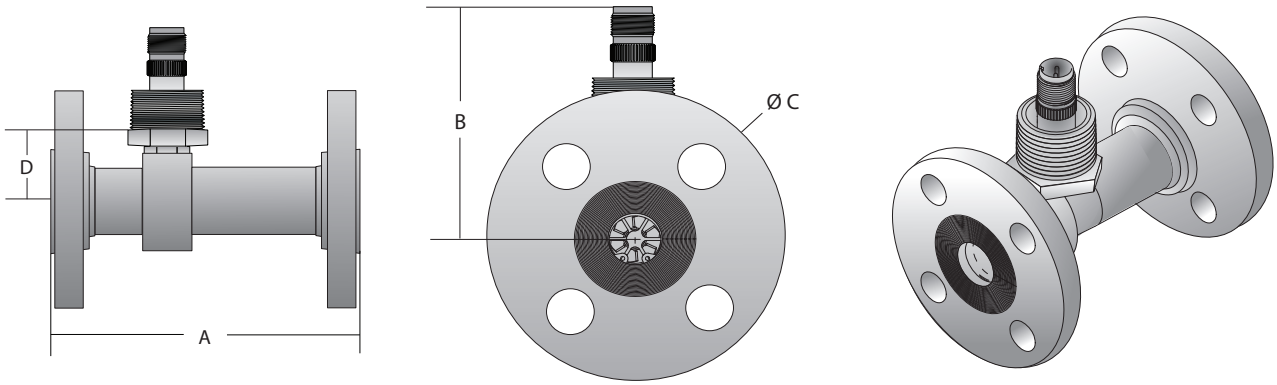

Size	A	B	C	D
B150-501-F15	5.00 in. (127.0 mm)	2.52 in. (64.0 mm)	3.50 in. (88.9 mm)	1.03 in. (26.7 mm)
B150-502-F15	5.00 in. (127.0 mm)	2.52 in. (64.0 mm)	3.50 in. (88.9 mm)	1.06 in. (26.9 mm)
B150-503-F15	5.00 in. (127.0 mm)	2.62 in. (66.5 mm)	3.50 in. (88.9 mm)	1.12 in. (28.4 mm)
B150-625-F15	5.50 in. (139.7 mm)	2.62 in. (66.5 mm)	3.50 in. (88.9 mm)	1.19 in. (30.2 mm)
B150-750-F15	5.50 in. (139.7 mm)	2.72 in. (69.1 mm)	3.88 in. (99.6 mm)	1.26 in. (32.0 mm)
B150-110-F15	5.50 in. (139.7 mm)	2.82 in. (71.6 mm)	4.25 in. (107.9 mm)	1.37 in. (34.8 mm)
B150-125-F15	6.00 in. (152.4 mm)	2.92 in. (74.2 mm)	4.62 in. (117.3 mm)	1.49 in. (37.8 mm)
B150-115-F15	6.00 in. (152.4 mm)	3.12 in. (79.2 mm)	5.00 in. (127.8 mm)	1.61 in. (40.9 mm)
B150-120-F15	6.50 in. (165.1 mm)	3.32 in. (84.3 mm)	6.00 in. (152.4 mm)	1.84 in. (46.7 mm)

Control. Manage. Optimize.

Blancett is a registered trademark of Badger Meter, Inc. Other trademarks appearing in this document are the property of their respective entities. Due to continuous research, product improvements and enhancements, Badger Meter reserves the right to change product or system specifications without notice, except to the extent an outstanding contractual obligation exists. © 2021 Badger Meter, Inc. All rights reserved.

www.badgermeter.com